SPECIFICATIONS

RATINGS:
20A 125VAC, 16A 250VAC UL, cUL
1/2HP 125VAC 105°C UL, cUL

16(6)A 250V~ VDE
10(4)A 250V~ VDE

CONTACT RESISTANCE:
35mΩ Max. at 50VDC

INSULATION RESISTANCE:
100MΩ at 500VDC

WITHSTAND VOLTAGE:
2,000VAC For 1 Minute

ELECTRICAL LIFE:
>10,000 Cycles

MATERIAL:

BODY:
Nylon 103HSL

ACTUATOR:
Nylon 103HSL, PC for illuminated len

CONTACTS:
Ag/Cu

TERMINALS:
Silver Plated Brass

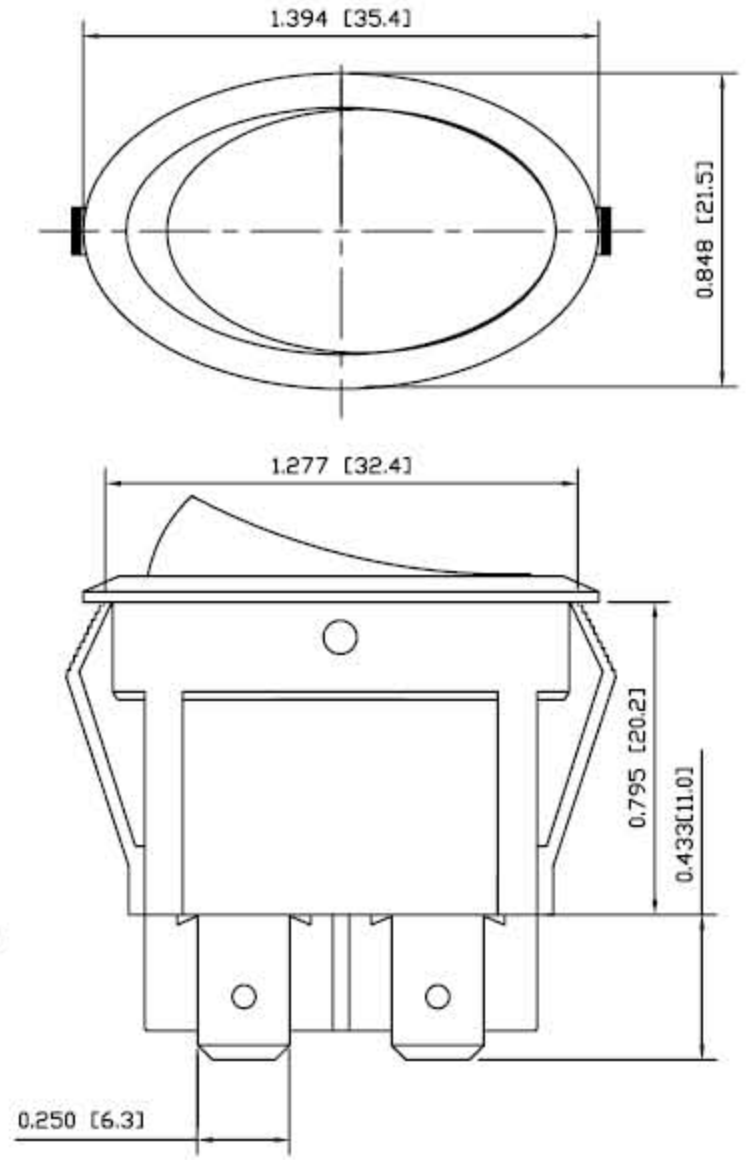

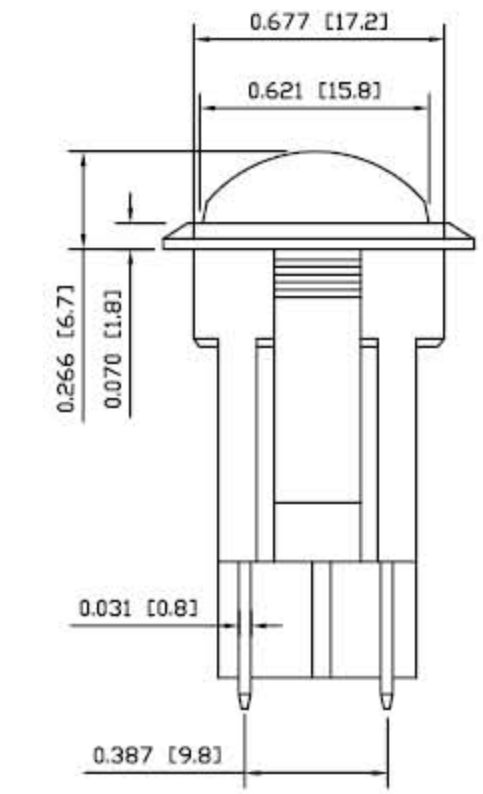

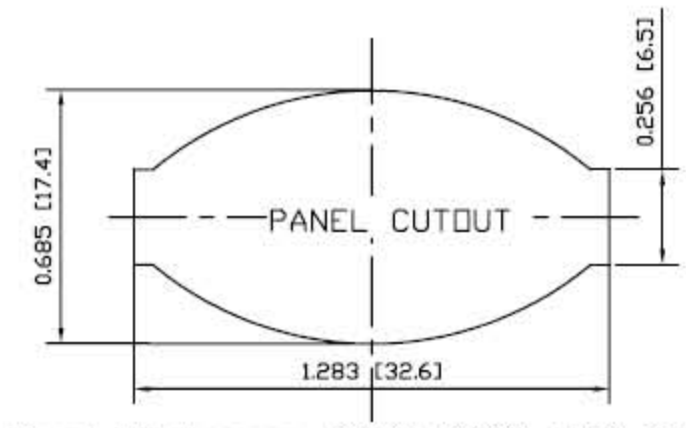

Panel Thickness: 0.039~0.138 [1.00~3.50]

How to Order:

YSR-9 — 21B — 2 — W — R-B — 1

Series

Function
DP ON.OFF

Marking
blank - no
2-I O Vert.
8-ON OFF Vert.

Marking Color
blank-no
B-Black
W-White
R-Red

Actuator-Body Color
B-Black
W-White
R-Red
G-Green
J-Orange
H-Grey

Lamp Voltage
blank-non-illu.
1 - 125VAC
2 - 250VAC
3 - 12V
4 - 24V

Marking Option:

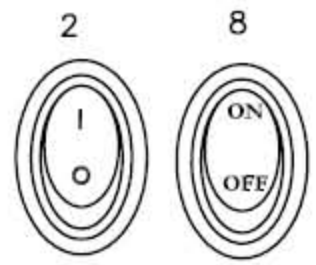

RoHS compliant

PHASEDA LLC	YSR-9 series			
SPECIFICATION SUBJEC TO CHANGE WITHOUT PRIOR NOTICE	DIMENSIONS ARE IN INCHES [MILLIMETERS]	TOLERANCES: DEC .X± 0.2	DRAWING NOT TO SCALE	DATE: JAN 2007