SPECIFICATIONS

RATINGS:
16A 125VAC, 10A 250VAC UL, cUL
1/3A 125–250VAC 105°C UL, cUL
10(4)A 250V~ 1E4 T125 VDE

10A 125VAC UL, cUL
6(2)A 250V~ 1E4 T125 VDE

CONTACT RESISTANCE:
35mΩ Max 50VDC

INSULATION RESISTANCE:
100MΩ at 500VDC Min.

WITHSTAND VOLTAGE:
1,500VAC For 1 Minute

ELECTRICAL LIFE:
>10,000 Cycles

MATERIALS

BODY:
PA66

ACTUATOR:
PA66, PC for illuminated rocker

CONTACT:
Silver Alloy

TERMINALS:
Silver Plated Copper

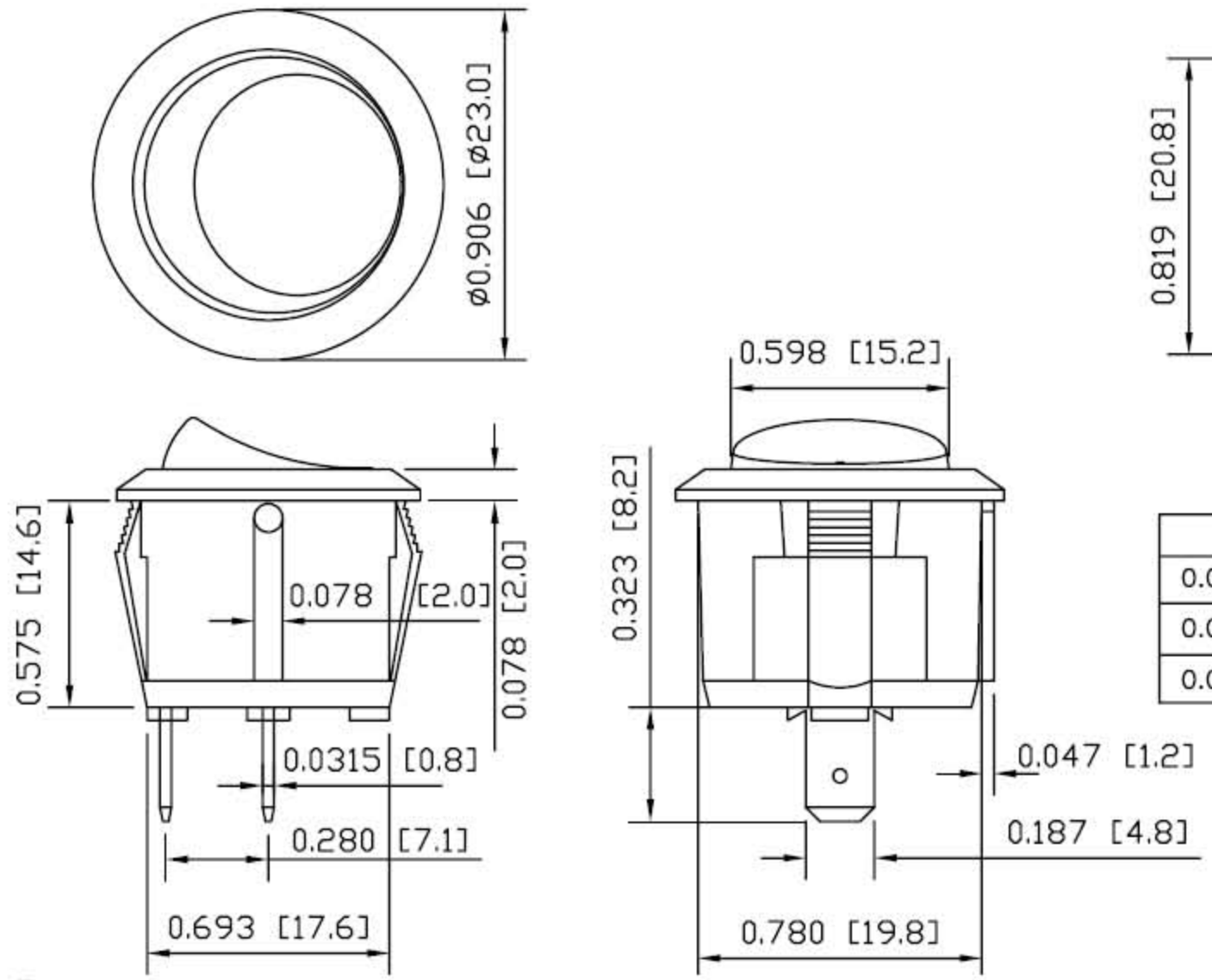

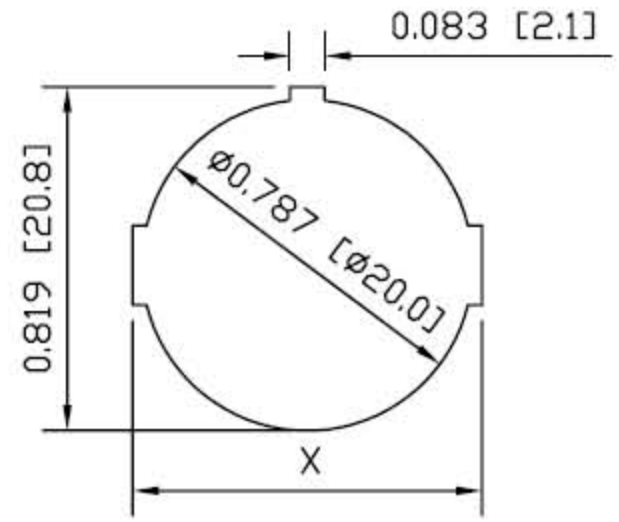

PANEL CUTOUT

PANEL THICKNESS	X
0.030~0.049 [0.75~1.25]	0.800 [20.3]
0.049~0.079 [1.25~2.00]	0.819 [20.8]
0.079~0.118 [2.00~3.00]	0.831 [21.1]

PVC Cap

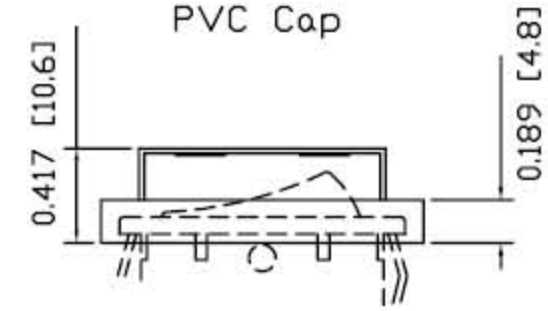

How to Order:

RL3-5 — 1 — H — 2 — W — R-B — 4 — 1 — F — P

Series

Function
0-Indicator
1-ON.OFF
2-ON.ON
3-ON.OFF.ON
K-(ON) OFF
F-ON.OFF.(ON)
(*) Momentary

Rating
0-Indicator
H rating:
16A 125VAC, 10A 250VAC
1/3HP 125-250VAC UL,cUL
10(4)A 250V~ VDE
G rating:
10A 125VAC UL,cUL
6(2)A 250V~ VDE

Marking
blank - no
1-Dot
2-I O Vert.
6-I O II Horiz.
7-I O II Verto.
8-ON OFF Vert.

Marking Color
blank-no
B-Black
W-White
R-Red

Actuator-Body Color
B-Black
W-White
R-Red
G-Green
J-Orange
H-Grey

Terminal
4-0.187" Q.C
6-solder lug

Lamp Voltage
blank-non-illu.
1 - 125VAC
2 - 250VAC
3 - 12V
4 - 24V

Illumination type
blank - non-illu.
F - fully illu.
L - LED effect

Cap
blank - no cap
P-PVC cap

Marking Option:

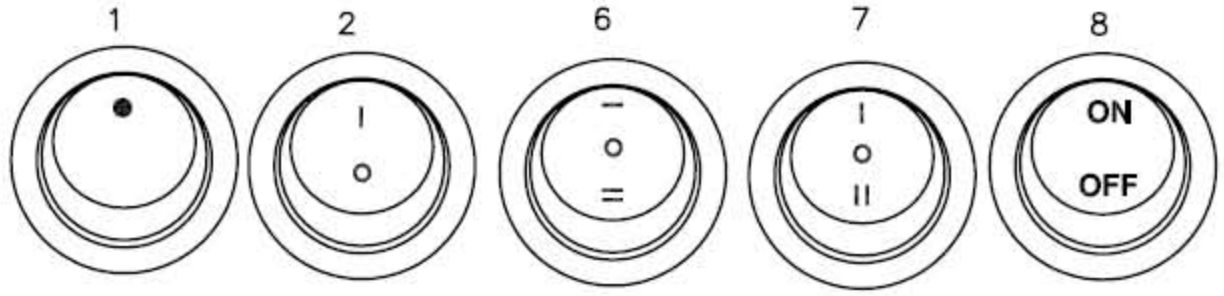

Terminal Option:

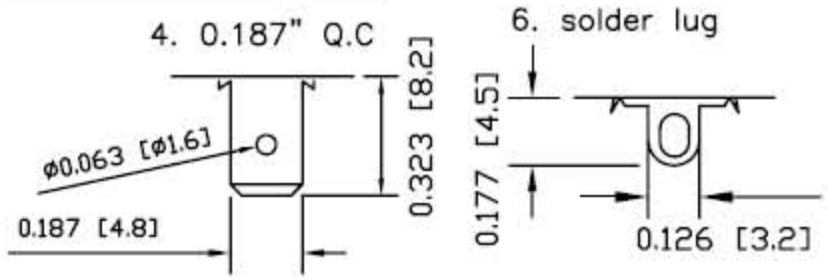

RoHS compliant

PHASEDA LLC	RL3-5 series			
SPECIFICATION SUBJEC TO CHANGE WITHOUT PRIOR NOTICE	DIMENSIONS ARE IN INCHES [MILLIMETERS]	TOLERANCES: DEC .X± 0.2	DRAWING NOT TO SCALE	DATE: JAN 2007